The Helios Chariot

Donelle Furline Jr.

Hojun Kim

Daniel Kurczy

Kylee McCue

Noah Pagliaroni

Daniel White

Professor Levendis & Professor Kowalski

Internal Design Review v2.11

4/17/2026

Table of Contents

Introduction *3*

Literature Review *3-8*

Initial Designs *8-11*

Decision Criteria *12-15*

Final Design *16-27*

Analysis & Testing *28-33*

System Software & Controls *33-36*

Summary and Next Steps *36*

References *37-38*

Introduction

In the city of Boston, outdoor solar testing faces a variety of difficulties. During many months of the year, weather conditions make experimenting with direct sunlight inconvenient, necessitating the creation of an indoor solar simulator. Recent projects have made efforts to perform outdoor solar testing but have been limited in their effectiveness. A previous ME capstone team that worked with Professor Levendis and Professor Kowalski were responsible for the development of a system incorporating a heliostat/mirror, solar tracker, and beacon. This system, named the CHAT (Closed-Loop Heliostat and Tracking) system, struggled not only with the city's weather conditions, but with rough and uneven terrain in transporting it to the test site. To combat these testing issues, Professor Levendis determined a need for an indoor solar simulator that would allow the teams working under Professor Kowalski and himself to continue improvement and proper testing on their systems.

While there were a handful of constraints and requirements to be met in this project, we're left with a great deal of creative freedom. One constraint is that our indoor solar simulator, the Helios Chariot, must produce an average irradiance of 1000 W/m^2 (or ≈100 W/ft^2 with respect to the heliostat area) that the sun is expected to generate with the CHAT system. Also, the bulbs used for the solar simulator should generate a similar wavelength of light that the sun generates, ranging from visible to infrared (IR) light, of the solar spectrum. This range has been specified between 600nm to 2700 nm. Discussions with Professor Kowalski emphasized the dangers of dipping into ultraviolet (UV) rays and the absorption of 200-500nm rays by the glass on the bulb. This spectrum range, the visible light spectrum (600nm-2700nm), reaches near IR and hits the peak of the solar wavelength.

A secondary constraint of this project is the fidelity with which sunlight needs to be replicated. Thus, matching the sunlight exposure that Boston receives throughout the year is the aim of our design. The earth experiences different exposure to the sun as the seasons progress and as the earth is at different parts of its path revolving around the sun. For Boston, the city is not along an equator and experiences this variation in exposure that is felt through the four seasons of the year. In this project, moving the sun through three-dimensional space above the CHAT system to reflect these variations is ideal for an indoor solar simulator of Boston.

The size of the solar simulator was not specified. The only requirement the simulator has with regards to size is somewhat open: that it is not so prohibitively large or heavy or unergonomic and can fit the roughly meter-tall heliostat from the CHAT system. There is no constraint on the materials other than the structural elements being sufficiently strong for the expected mechanical load (detailed in this report), obtaining an appropriate reflectivity of the trough surface, and for an effective heat absorption or dispersion on the trough surface. There is no constraint on how we configure the system.

Literature Review

To understand the need for an indoor solar simulator, it is necessary to explore the foundational principles of this technology. This section also explores existing solutions, regulations, materials

and components, and the relevant past work done by the CHAT System capstone group. By understanding these core concepts, navigating the gaps in knowledge related to replicating the optical and thermal properties of sunlight for the design of an indoor solar simulator will be a plausible goal to achieve.

Principle & Concepts

One of the most efficient ways to harness solar thermal energy is by using concentrated solar power (CSP). This method transforms solar irradiation into thermal energy, which is then converted into electrical energy.

CSP consists of four main components which are a heliostat field, solar tower, receiver, and power block. A problem faced by CSP is its high cost, of which Heliostat fields are responsible for about 50% of the capital costs and 40% of total energy losses [1]. Heliostats utilize a high reflectivity mirror that tracks the sun and concentrates its beam on a target located on a central tower. Sunlight can be concentrated by at most 1,500 times. This power heats a fluid which can generate steam to drive a turbine to produce electricity.

The most common heat transfer fluid used to store thermal energy is molten salt, which is efficient for high-temperature storage of around 565° Celsius or more. Other fluids are supercritical carbon dioxide, steam/water, and air. A thermal energy system (TES) allows storage of excess heat and can increase plant capacity factor by 70-80% in a few designs. There are many factors that can affect the efficiency of a CPS such as optical efficiency, thermal efficiency, and system efficiency [2]. Overall, the advantages of CSP are its high thermodynamic efficiency, scalability, energy storage tower integration, and efficient use of land. Challenges of this system include expensive initial cost, complex heliostat control and thermal management, water cooling, and regional limitations.

Solar panels, on the other hand, convert sunlight into electricity through the photovoltaic effect. Semiconductor materials such as silicon release electrons, creating a direct electrical current (DC). The efficiency of a solar panel can range from 4-40% depending on the solar cell material. Recent developments in PV technology found that the efficiency of solar panels can increase by 30-50% using a 2-axis solar tracking system compared to fixed axis panels [2]. Solar panel fields cannot output as much energy as CPS fields.

Existing Solutions

There are existing solutions for the solar simulator aspect of this project. Researchers in the School of Engineering and Sciences, Tecnologico de Monterr developed a physical prototype of a system that can simulate solar conditions at specific regional locations, dates, and time called the *Heliodome*. The light source for this system consisted of a combination of incandescent, gas, and LED bulbs and can achieve between 100 and 4000 W/m^2 [3].

Structurally, the system consists of a light source, an arc in the shape of a semicircle, and support beams with 3 degrees of freedom (DOF). Mathematical models and databases were used to configure and calibrate the *Heliodome* based on 5 different parameters: longitude, latitude, standard longitude, the hour, and the number of days of the year. The National Solar Radiation

Database (NSRDB), managed by NREL (National Renewable Energy Laboratory), provides high resolution solar radiation data for North America.

Another commonly used design for solar simulators is the Newport Xenon solar simulator. Different models cover various illumination areas at a non-moving angle. This is an immobile and highly expensive solar simulator that is often preferred for PV solar researchers. Newport specializes in matching the solar spectrum and includes the UV range of the solar spectrum. Although highly efficient and accurate in matching the solar spectrum, the ability for the bulb used in our design to display UV radiation has been considered unsafe for testing in a Capstone lab space. However, an improvement to the immobility of Newport's solar simulator has garnered attention as well as a lower total production cost.

Intellectual Property

Patents in the world of solar simulation generally focus on the systems that create the artificial sun necessary for testing. Development of solar simulators began in the late 1940s to conduct material analysis such as aging of materials caused by high UV irradiation or high temperature conditions to simulate reentry into Earth's atmosphere [4]. High Flux solar simulators for CSP emerged during the 1990s when interest in renewable energy increased. Today, the most common application for solar simulators is the testing of photovoltaic solar cells [4]. As seen in the past, both UV radiation and heat were found to be significant design considerations for the indoor solar simulator. UV radiation affects those physically exposed, but also effects the materials exposed and reduces the efficiency of the tool over time. An in-depth heat transfer analysis was then deemed essential to the integrity of the final design.

Standards and Regulations

There are three compliance standards that define solar simulator performance which are IEC 60904-9 (2020), JIS C 8904-9 (2017), and ASTM E 927-10 (2010). These standards are based on three criteria: (1) spectral match, (2) spatial non-uniformity of irradiance, and (3) temporal instability [5]. Industry standards and regulations encourage the use of a spectrometer for comparing the selecting bulb against the solar wavelength, a pyranometer for irradiance measurement, and a digital temperature sensor for the heat generated from thermal radiation.

Spectral match defines how well the bulb distribution of irradiance among different wavelengths approximates natural sunlight. Therefore, spectral match is a measurement of the distribution of irradiance across six defined wavelength ranges as a percentage of the total irradiance. Spatial non-uniformity is a measure of how the irradiance varies over a defined area.

The output of a solar simulator must be stable over time to ensure that lamp fluctuations do not distort measurements. To measure temporal instability, variations of lamp power and current are monitored and presented as a maximum-over-minimum average for observations. On the following page, Table 1 lists the classification standards used to define solar simulators by the International Electrotechnical Commission (IEC).

Table 1: IEC Solar Simulator Classification Table (2020) [5]

Class A+, A, B, and C Standards and Specifications Defined by IEC 60904-9 (2020)

	Spectral Match*	Non-Uniformity of Irradiance	Temporal Instability, Short-term	Temporal Instability, Long-term
Class A+	0.875-1.125	1%	0.25%	1%
Class A	0.75-1.25	2%	0.5%	2%
Class B	0.6-1.4	5%	2%	5%
Class C	0.4-2.0	10%	10%	10%

Materials & Components

The main component of a solar simulator is the light source. There are currently four types of light sources applicable to this topic which are Xenon arc lamps, metal Halide arc lamps, quartz tungsten halogen lamps, and LED lamps [4]. A few of these sources are better for certain applications than others depending on the desired power, UV spectrum, and cost.

Xenon Arc lamps are the most common light source used by researchers mainly for their ability to provide stable spectral matches to sunlight. They also have a spectrum almost identical to the sun at 5800 K. High-pressure short-arc lamps can produce high intensity light beams. With all these advantages, there are also disadvantages such as expensive power supplies & bulbs, high pressure lamp safety concerns, and a short lifespan. The lifespan of a lamp can range between 500-3,000 hours. Currently, these lamps are most used to test PV cells with systems able to achieve an irradiance of 500 Watts per meter squared [6].

The other light source alternatives offer longer lifespans; however, they do not hold the same properties as xenon lamps. The closest alternative is a metal halide arc lamp which has a similar spectrum to the sun spectrum, high temporal stability, lower pressure than xenon lamps, and longer lifespan ranging between 10,000-25,000 hours. The cheapest and most cost-effective light sources are LEDs and Halogen lamps [7] but are only useful for certain solar simulator applications due to their insufficient light intensity. Figure 1 is an image of Newport halogen lamps, which are incandescent bulbs that use halogen gas. These lamps are great for specific research and testing applications. Findings have suggested the purchase of six SATCO S3475 Tungsten Halogen light bulbs due to their ability to produce 250W of power, generate 4000 lumens, reach 2900K, and the AC socket compatibility of each bulb.

Figure 1: Halogen Lamp Products sold by Newport

Previous Capstone Work

The Phase I capstone for this project was completed in Spring 2024 by Emmanual Mendez, Julian Newquist, Andrew Pflaumer, and Daniel White. This group mainly focused on building a prototype helio- mirror with dual-axis rotational motion that could track a light source and a support structure for the mirror. Two stepper motors control the orientation of the mirror about its azimuthal and zenith angle. The structure of the prototype was built using 80-20 extrusions and brackets which experienced deflections in high winds. The light source was tracked using photovoltaic sensors [8]. However, a flaw in the prototype prevented the mirror from being able to reflect the sun at the fixed target. Figure 2, below, is the final prototype from phase I with the initial sun tracker set-up.

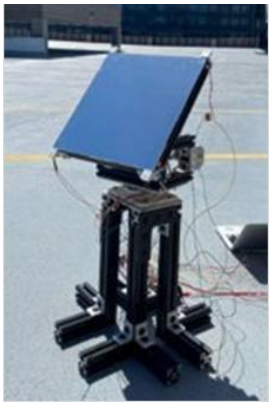

Figure 2: Final Prototype of Phase I Solution [8]

Phase II capstone was completed in Spring 2025 by Ashnu Cassod, Stehen Catalina, Aura Herce-Duchini, Carter Hughes, James Minardi, and George Primoff. This team focused on developing design solutions for the solar tracker, a new small scale mirror prototype that can reflect light at the target, and a small-scale tower that acts as a locating beacon for the mirror. The newly developed algorithm for the solar tracker uses feedback from four lux sensors to compute the vector between the sunlight and receiver to reflect light onto the beacon. Figure 3, found on the following page, is an image of the more refined closed-loop tracking system with the addition of a homing sensor and a zeroing position. Additionally, to achieve comparable precision to existing solutions, the system was transformed from an open-loop system to a closed-loop system. An open-loop system uses astronomical data to focus on sunlight [10]. However, if environmental conditions were to alter the position of a heliostat, there would be no way for the system to track if the sunlight hits the target. The team created a closed-loop system based on three units: solar tracker, a self-moving mirror that reflects light to target, and a receiver that acts as a beacon and a target for the mirror [8]. Results indicate there was still greater precision error than desired; however, this was due to size and budget constraints.

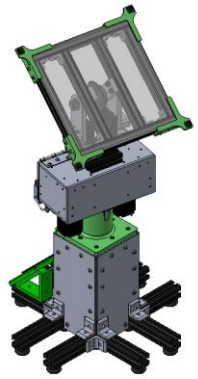

Figure 3: A CAD Screenshot of Highlighted Homing Positions [8]

Overall, with this foundational roadmap, the path for this capstone project is made clear. Concentrated solar power is a distinct approach to solar power with unique advantages and challenges. CSP offers thermal storage and high thermal efficiency but faces barriers regarding high operating costs and regional limitations. Stakeholders require affordable testing solutions to advance this technology and potentially solve these challenges. The growing solar simulator market highlights this increase in demand for renewable energy testing tools. Existing solutions such as the Heliodome are proof that it is possible to replicate the path of the sun in the earth's sky and its thermal conditions with a scaled prototype. IEC, JIS, and ASTM standards are good references for validating the performance of a solar simulator. Key components such as Xenon arc lamps dominate the market due to the accuracy of their spectral match to the sun. The previous capstone group has done essential work in developing a closed loop tracking system.

Initial Designs

Throughout the design process of this project, various inspirations and discussions provided a steady flow between iterations and design changes. From a desire to improve on the existing solutions in the *Heliodome* and Newport Xenon solar simulators to a variety of mechanical and optic considerations, these designs evolved over time. The following section will explain the inspiration and developing design features that led to the final design for our Helios Chariot.

Inspiration & Discussion

Originally, a *Heliodome* design, which involves an arc moving around an axis to generate light at different angles in three-dimensional space, provided inspiration for our initial design [3], Figure 4, seen on the following page, reflects the movement of a bulb mimicking the sun's movement along an arc. This movement is made from rotations about a horizontal axis for positioning throughout of the sun throughout a simulated day. The moving arc is held by 2 support beams along a fixed circle for mounting. This design essentially acted as a spotlight, moving within fixed boundaries and at varying angles to mimic the movement of the sun in the sky.

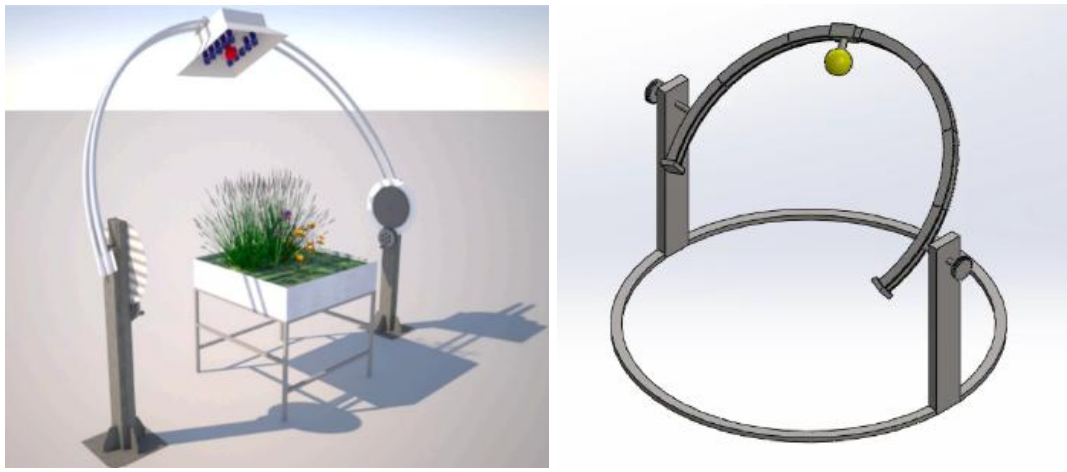

Figure 4: *Heliodome* CAD model (left), Our Initial Solar Simulator CAD Design (right)

Throughout discussions with Professor Levendis, Professor Kowalski, and Professor DiMarzio, this initial design has been built upon these discussions and vastly improved to reflect the scope and constraints of the project.

The movement of the bulb along the arc is a major focus of the project. Initially, the movement was like the *Heliodome* and involved three degrees of freedom (3DOF). When replicating the apparent motion of the Sun using the selected light source and reflector, it is assumed that the distance between the Sun and the Earth remains constant. This assumption introduces an important simplification: the Sun's position can be fully described by only two angular variables rather than three spatial coordinates. Specifically, the degrees of freedom are reduced from spherical coordinates $(r,\ \phi,\ \theta)$ to $(\phi,\ \theta)$ since the radial distance r between the Sun and the Earth is fixed. As a result, the position and motion of the Sun can be completely mapped using only the zenith and azimuth angles.

Guide Rail Design

To modify the zenith angle ϕ , the light source must move along a prescribed path while maintaining a constant distance from the mirror surface. This motion inherently requires the system to overcome gravitational forces while preserving geometric constraints. To achieve this, a circular guide rail coupled with a carriage mechanism is proposed, as pictured in Figure 5 on the following page.

The carriage system consists of a stepper-motor-driven spur gear that engages with a circular gear rack, multiple bearings to ensure smooth motion, and a mounting structure that supports the light source. Key specifications of the initial ring gear and pinion gear can be found in Table 2, also found on the next page. The circular gear rack is designed as a modular component that can be assembled from multiple segments. On the following page, Figure 6 depicts guide rail segments that were 3D printed for the updated design of the guide rail system. This system is responsible for bearing the weight and movement of a motor chassis and trough assembly.

Table 2. Preliminary Specifications of Ring Gear and Pinion Gear

Module (mm)	Number of Ring Gear Teeth	Ring Gear Pitch Diameter (mm)	Number of Pinion Gear Teeth	Pinion Gear Pitch Diameter (mm)
2	665	1330	40	80

Figure 5: Reference design of a circular guide rail and carriage mechanism used as inspiration for the proposed system [9].

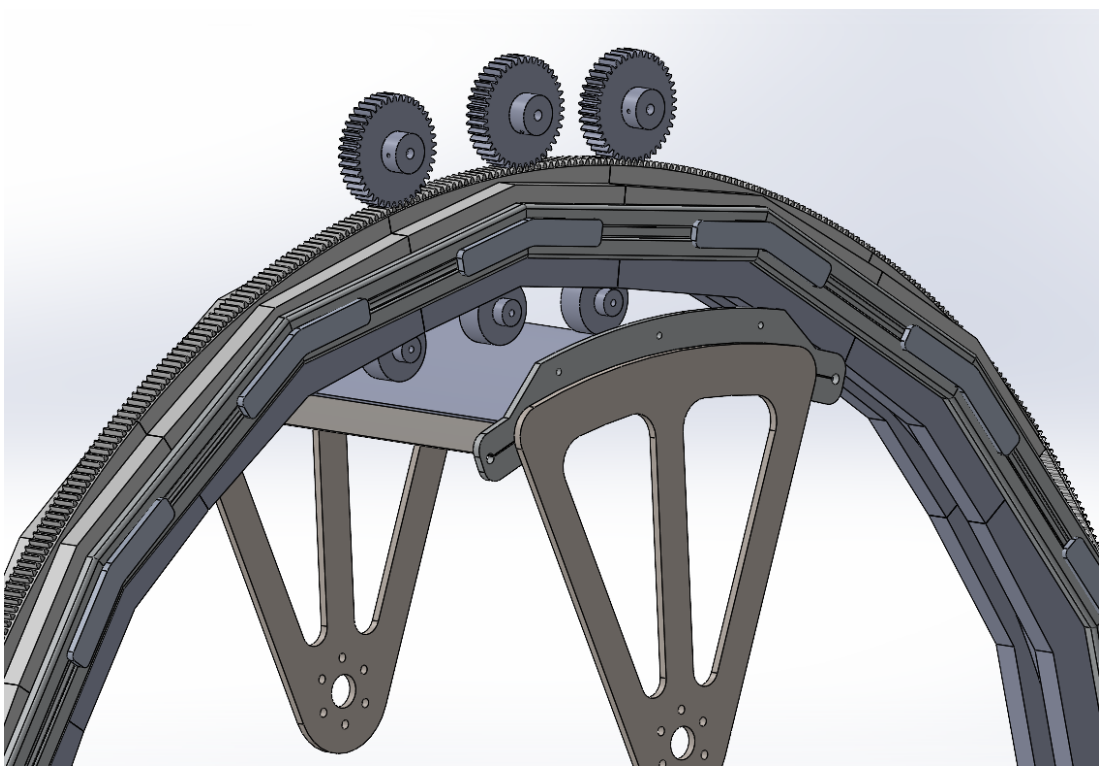

Figure 6: Preliminary CAD model of the proposed circular guide rail and gear-driven carriage system

Gear Design

The gear system was designed using a module of $m = 2\ mm$, selected to balance motion resolution, manufacturability, and structural robustness. Smaller modules improve positional resolution and smoothness of motion but increase manufacturing difficulty and sensitivity to misalignment. Larger modules provide improved tooth strength and tolerance to fabrication error but reduce resolution. A module of 2 mm provides a balance between these requirements.

The ring gear contains $Z_{ring} = 665$ teeth (pitch diameter $d_{p,\,ring} = 1330$ mm), while the initial pinion gear contains $Z_{pinion} = 40$ teeth ($d_{p,\,pinion} = 80$ mm). This configuration maintains compatibility between pitch diameters while preserving manageable pinion size and tooth strength. A standard 20° pressure angle involute profile is assumed to ensure smooth engagement and minimize undercut risk. Tooth proportions follow standard full-depth gear geometry, with addendum m and dedendum $1.25m$ [10]. Because the ring gear is segmented, careful alignment of pitch spacing at segment interfaces is required to prevent tooth indexing errors.

Stepper Motor Selection Considerations

The total carriage mass is estimated to be approximately 5-8 kg. Assuming worst-case near vertical motion at the start, the motor must overcome gravitational torque in addition to frictional and dynamic loads. For a pinion pitch radius of 0.04 m, the gravitational torque requirement alone is approximately 2.0-3.2 N·m. Accounting for mechanical inefficiencies, preload forces and dynamic acceleration, a practical design torque margin of approximately 6-10 N·m with a safety factor of 3 is recommended to ensure reliable operation without step loss.

When selecting a stepper motor, the specification comparison will prioritize the following parameters. First, maximum holding torque serves as the primary indicator of available static torque capacity. For reference, 1 N·m corresponds to approximately 141.6 in·ozf. Therefore, a required design torque range of 6-10 N·m translates to approximately 850-1416 in·ozf. For direct drive configurations, the motor's rated holding torque should approach or exceed this range to maintain sufficient safety margin under vertical loading conditions. Second, a motor current must remain compatible with the selected driver and power supply. Typically, higher torque motors require increased phase current [11], which directly affects thermal performance and driver selection. Electrical constraints therefore impose practical limits on achievable torque. Finally, although torque is the dominant design constraint due to gravitational loading, rotational speed must still satisfy the required carriage travel velocity.

Comparison of available motor frames [12] indicates that NEMA 23 class motors, with holding torques typically below 600 in·ozf, may be insufficient for direct drive operation under worst-case vertical loading. In contrast, NEMA 34 class motors can provide holding torque exceeding 1200 in·ozf and therefore offer viable direct drive capability. However, the substantial mass of these motors was identified as a secondary constraint that would eventually necessitate further structural and powertrain optimization. Consequently, the final design replaces the direct-drive NEMA 34 configuration with a NEMA 23 paired with a 20:1 planetary gearbox to achieve the required torque while significantly reducing overall carriage mass.

Decision Criteria

Initial ideas must focus on the scope of the project, constraints issued by Professor Levendis and Professor Kowalski, the reduced $1,000 Capstone budget, and the overall impact or efficiency of the idea in reference to our goal. The system criteria for our decision matrices is as follows: 5 for greatest value to a desired characteristic and 1 for lowest value to a desired characteristic. The total represents a sum of the value for our desired characteristics that meet constraint and scope requirements. A potential solution will more than likely receive a no-go if there is a genuine threat to the safety of others in the lab or to our group during testing and if the cost of an ideal solution would cause financial ruin with the established budget.

Table 3, below, depicts the general decision matrix used to determine the value of initial ideas. These ideas would be compared through the decision matrices and selected, through group discussion and advisor meetings.

Table 3: Sample Decision Matrix for Bulb Selection

Potential Solutions	Cost	Power	Spectrum Match	Lifespan	Safety	Total
Xenon Arc	1	4	5	2	1	13
Metal Halide Arc	2	4	4	3	3	16
Quartz Tungsten Halogen	4	3	3	4	4	18
LED	5	2	1	4	5	17

The safety concerns due to the nearly identical solar spectrum match forced a no-go decision on the Xenon Arc bulbs. UV radiation is prominent in these types of bulbs and would endanger all those in contact throughout testing or accidental mishandling. Likewise, metal Halide Arc bulbs generate UV radiation, albeit not to the extent that Xenon Arc bulbs do. Discussions led to a decision between LED and Quartz Tungsten Halogen bulbs. The closer spectrum match, and greater power ended up provided Tungsten Halogen the edge over the commonplace LED.

Likewise, a decision matrix was made for the method of light refraction for the selected Quartz Tungsten Halogen bulbs. Based on discussions with Professor Levendis, Professor Kowalski, and Professor DiMarzio, the following decision matrix was created in Table 4, found on the following page.

Table 4: Decision Matrix for Light Collimation Method

Potential Solutions	Size	Efficiency	Cost	Weight	Complexity	Total
Lens	3	4	1	4	3	15
Parabolic Reflector	2	3	5	2	4	16

Ultimately, a lens was discussed as a more effective and efficient method to collimate light, but the cost to buy a custom lens that suits our needs was far more of an obstacle than the ability and cost to create a custom parabolic reflector. Cost alone for a custom lens of the size needed would be detrimental to the available budget. The major concern added to selecting the parabolic reflector is weight concern.

Subsequently, the arch holding the Tungsten Halogen bulbs and the parabolic reflector was discussed. Initially, as seen in **Initial Designs**, the arch was expected to revolve around an axis of rotation. This would allow for three-dimensional movement of the bulbs to mimic the sun in 3 degrees of freedom. Table 5, below, displays the internal decision to revoke this initial plan.

Table 5: Decision Matrix for Arch Positioning

Potential Solutions	Stresses	Cost	Weight	Complexity	Total
Revolving	1	3	3	2	9
Fixed	3	4	2	2	11

A fixed arch position provided for a reduction in complexity and stress caused by the moving weight of the parabolic reflector and light array assembly on the arch itself.

Subsequently, the fixed arch position needed to be constructed from either a continuous or discrete curve. Machine shop limitations and the cost of a custom radial path mimicking the sun throughout the sky led to the concept of a discrete curve composed of discrete structural members. Table 6, below, displays the decision to move forward with a curve composed of discrete structural members over the prescribed radial and continuous curve.

Table 6: Decision Matrix for Arch Construction

Potential Solutions	Time	Cost	Weight	Complexity	Total
Continuous Curve	2	3	2	4	11
Discrete Curve	4	5	3	2	14

Time, cost, and complexity were major decision makers for letting go of the continuous curve arch construction idea. With a few weeks left for placing machine orders and a need for testing as the second half of this capstone course comes rushing ahead, a discrete curve would simplify the need

for outsourcing and for further complex calculations that have been slowing our desire to manufacture down.

The reflector design was then put into question with an updated discrete curvature. Table 7 depicts the three options we had discussed with Professor Kowalski and Professor DiMarzio.

Table 7: Decision Matrix for Light Reflector Method

Potential Solutions	**Collimation Ability**	**Cost**	**Machining**	**Assembly Complexity**	**Light Array Accommodation**	**Total**
Parabolic Reflector	3	2	2	4	3	14
Off-Axis Mirror	3	3	1	2	3	12
Parabolic Trough	4	4	4	3	5	20

The parabolic reflector was the original idea presented against a lens, but the method of reflection was put into question when imagining the final design of the solar simulator. An off-axis mirror was considered after discovering a method that New York uses to redirect sunlight underground with light pipes [13]. A parabolic trough was then considered after observing the frame of a parabolic trough that another group under Professor Levendis and Professor Kowalski were using in the capstone lab.

The complexity of the geometry and integration with the vision for the solar simulator design of the off-axis mirror provided the group with an easy no-go. The parabolic trough gained significant consideration after speaking with Professor Kowalski and Professor DiMarzio regarding the alignment of the bulbs in an array that mimics a line along the focal point. Overwhelming desire for the trough grew and its implementation would be far easier with the original parabolic reflector design already made.

Later in the design process, we found a single 1500W tungsten halogen bulb that was cheaper and simpler to implement than an array of discrete bulbs, simplifying electrical considerations.

The selection of the powertrain for the Zenith axis was a critical engineering point, as it dictated the structural stability, control precision, and operational safety of the entire assembly. The primary challenge involved actuating a carriage across a 180° vertical sweep while maintaining a constant focal distance, necessitating a drivetrain capable of overcoming high gravitational torque without compromising the integrity of the arch. The following page, Table 8 depicts our decision matrix for the powertrain selection for the Helios Chariot.

Table 8: Decision Matrix for Powertrain Selection

Potential Solutions	Total Mass	Torque Capacity	Power Efficiency	Control Precision	Volume	Total
NEMA 34 (Direct Drive)	2	3	3	3	2	13
NEMA 23+20:1 Gearbox	4	5	5	5	4	23

Based on the decision matrix above, the NEMA 23 stepper motor (23HS30-2804-ME1K) and 20:1 planetary gearbox (EG23-G20-D6) was selected as the final powertrain selection for the following technical reasons. First, while a NEMA 34 motor could theoretically handle the torque, its excessive mass of 5.4 kg created a prohibitive risk of structural deflection in the discrete arch. By switching to a NEMA 23 configuration, the weight of the carriage was reduced by over 50%, which significantly lowered the bending stress on the arch. Second, while NEMA 34 provides sufficient holding torque, it offers a narrow safety margin for dynamic loads. The 20:1 planetary gearbox amplifies the NEMA 23's torque to 30 N·m, ensuring zero step loss during ascent. Finally, the planetary gearbox provides a mechanical reduction that effectively multiplies the angular resolution of the stepper motor. This allows the simulator to achieve the fine angular adjustments required for high-precision solar replication, which would have been more difficult to control with the coarse steps of a direct-drive NEMA 34.

Figure 7: 23HS30-2804-ME1K NEMA 23 Stepper Motor with Integrated Magnetic Encoder

Figure 8: EG23-G20-D6 20:1 Planetary Gearbox

Final Design

The culmination of our research and planning is an assembly with hemispherical coordinate control around a focal point centered on the CHAT system's heliostat. It allows for the movement of our light source by controlling both the azimuth and zenith angles. The main areas taken into consideration were the zenith arch and the prints necessary to make it a continuous curve, the base platform for azimuth angle rotation, the solar carriage chassis for moving along the desired track, and the reflector/lamp array outputting our desired irradiance.

Rail Positioning

Figure 9 displays the CAD model of the final design consisting of a model of the rotating table, a fixed arch with discrete elements, rail, parabolic reflector carriage, and the Heliostat mirror.

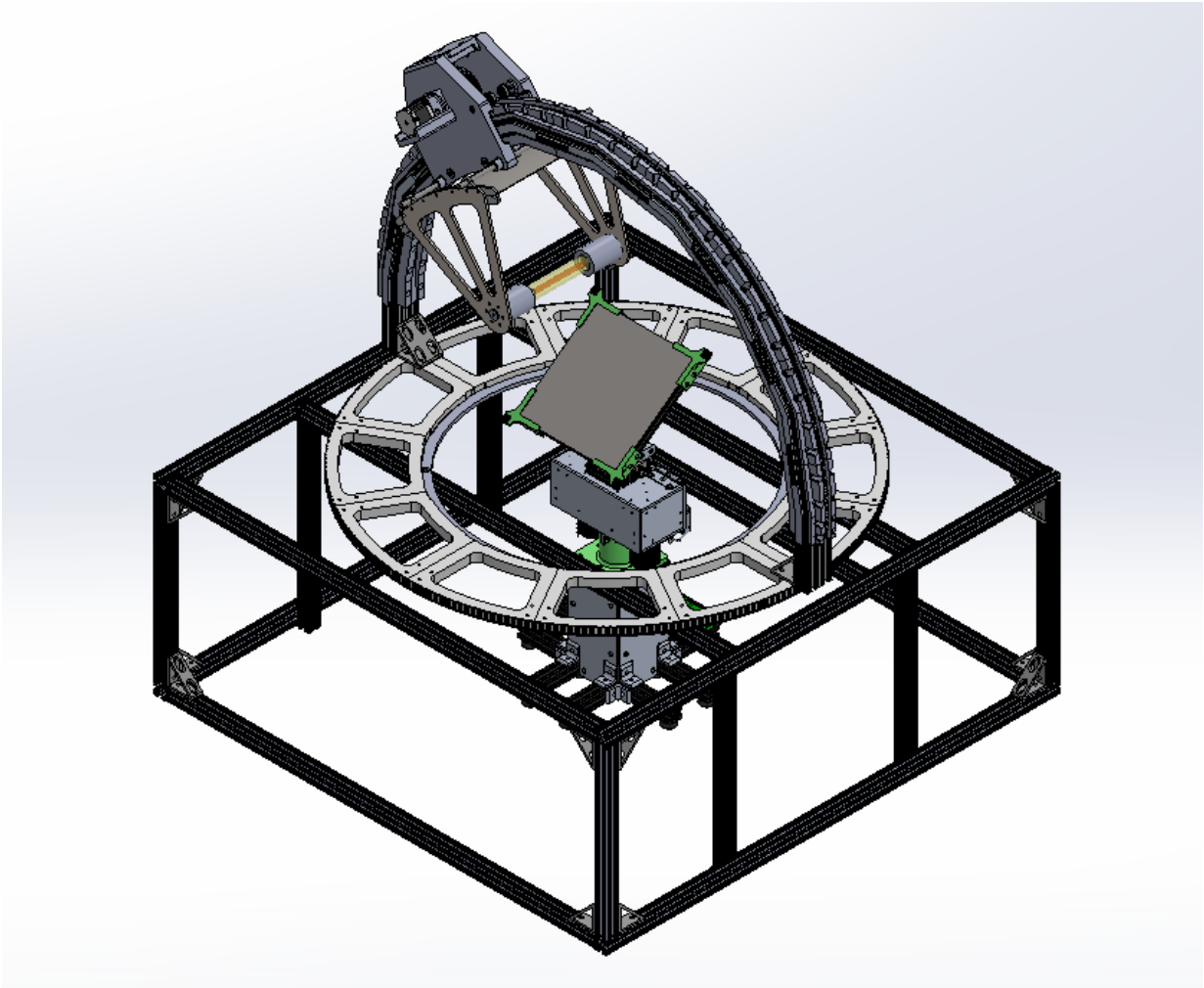

Figure 9: Final Solar Simulator CAD Model with Heliostat Mirror

After considering the forces that would be present on an adjustable-position arch like in the *Heliodome*, we decided that using a fixed-position arch on a rotary table instead would retain control in two degrees of freedom while avoiding stress concentration at a joint. Rotating the base of the assembly adjusts the zenith angle, while the position along the track dictates the azimuth angle. The frame provides general support for the arch structure and zenith motion roundtable. Centered, the CHAT system heliostat is in line with the bulb chassis and motor carriage for the collimation of the light from the trough. This allows for the CHAT system to fully function and integrate into the Helios Chariot design.

Arch Structure

The 1.25-meter diameter arch is composed of a structural skeleton, as seen in Figure 10 below, and a 3D-printed hardware exterior used for rail and for the connection of individual elements, seen in Figure 11 and 12 on the next page. This configuration creates a structurally sound base for the rail and allows for easier manipulation of the weight of the light carriage. The discrete elements are a result of circular machining difficulties.

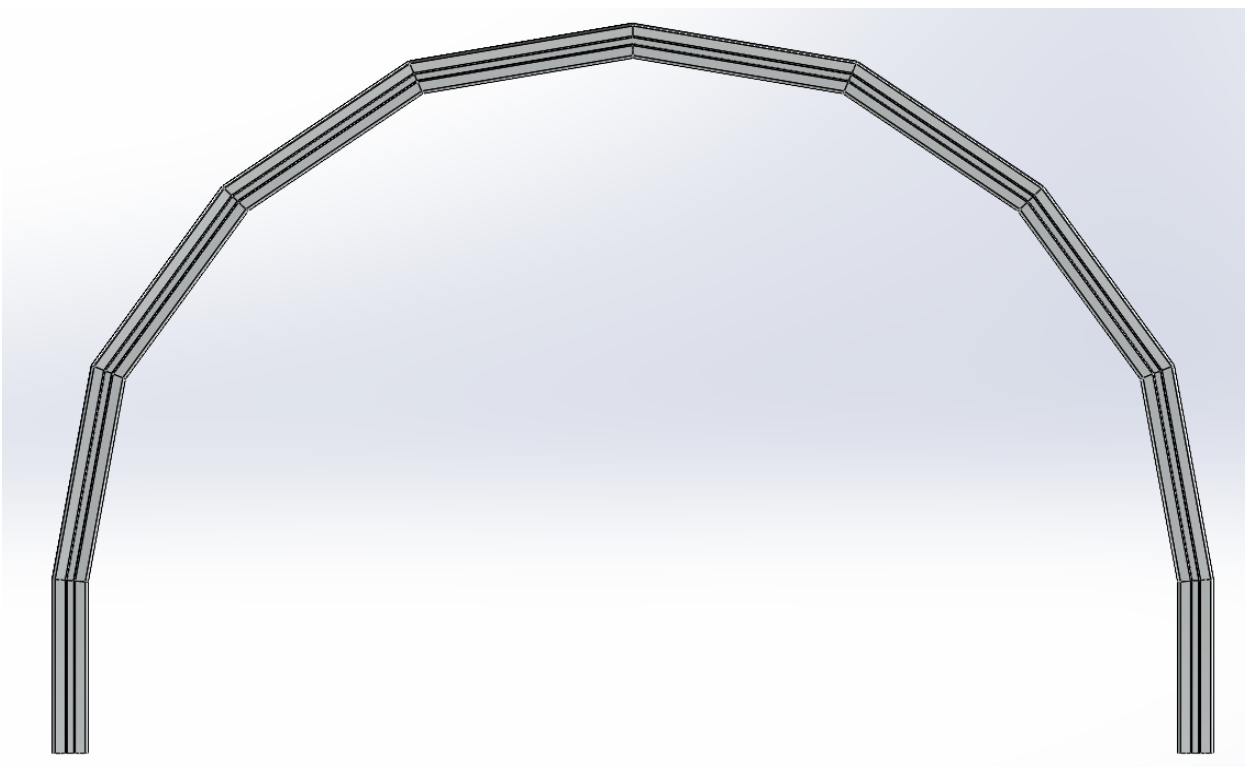

Figure 10: Arch Structural Elements CAD Model

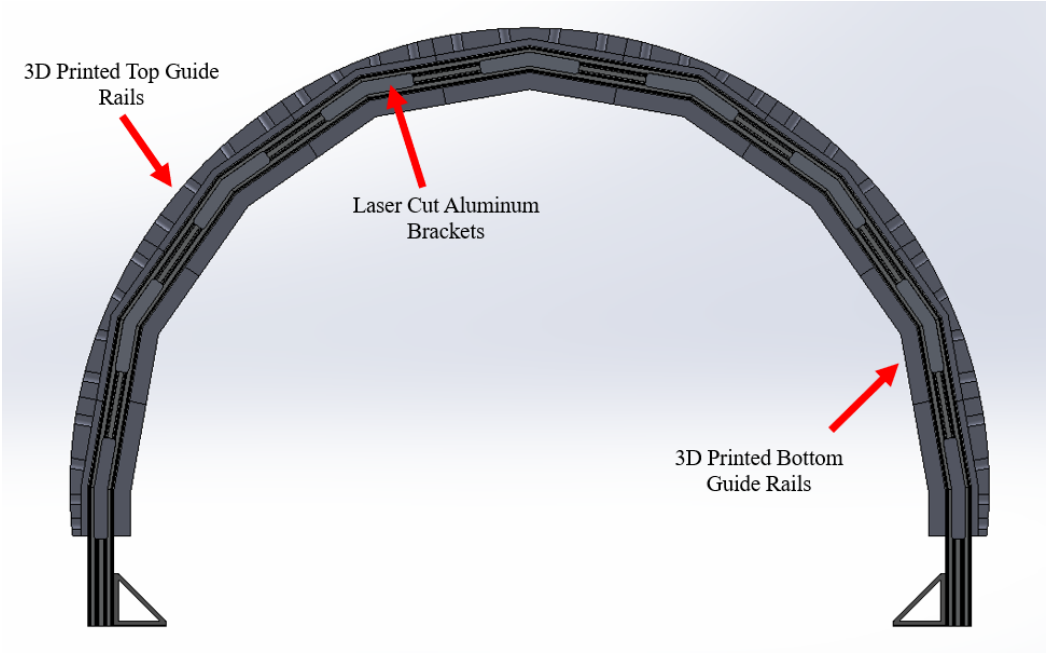

Figure 11: Front View of the Arch with Hardware CAD Model

Figure 12: Arch with Hardware CAD Model

While the initial design structure for the azimuth-controlling rail was to be machined along a radial path, the size and setup limitations of the machine shop motivated a switch to an arch composed of discrete structural members, as discussed in the decision criteria.

80/20 T-slotted aluminum extrusion became the immediate option for the arch material due to its lightweight profile, high strength-to-weight ratio, and wide array of available hardware. While we considered bending the arch, in-house constraints made it impossible, and outsourcing time and costs dissuaded us from this idea. The alternative that we decided on was a series of double-width framing rails cut at angles to approximate a semicircle. Planar structural brackets join the beams at their angled cuts, fastening to framing nuts.

3D-Printed Precision Rail

To achieve high-precision movement while utilizing the discrete aluminum frame, the system incorporates a guide rail architecture fabricated through FDM on a Stratasys F370 printer using ABS material. As shown in Figure 13 and 14, these components are bifurcated into upper and lower tracks to facilitate a constrained motion path for the carriage assembly.

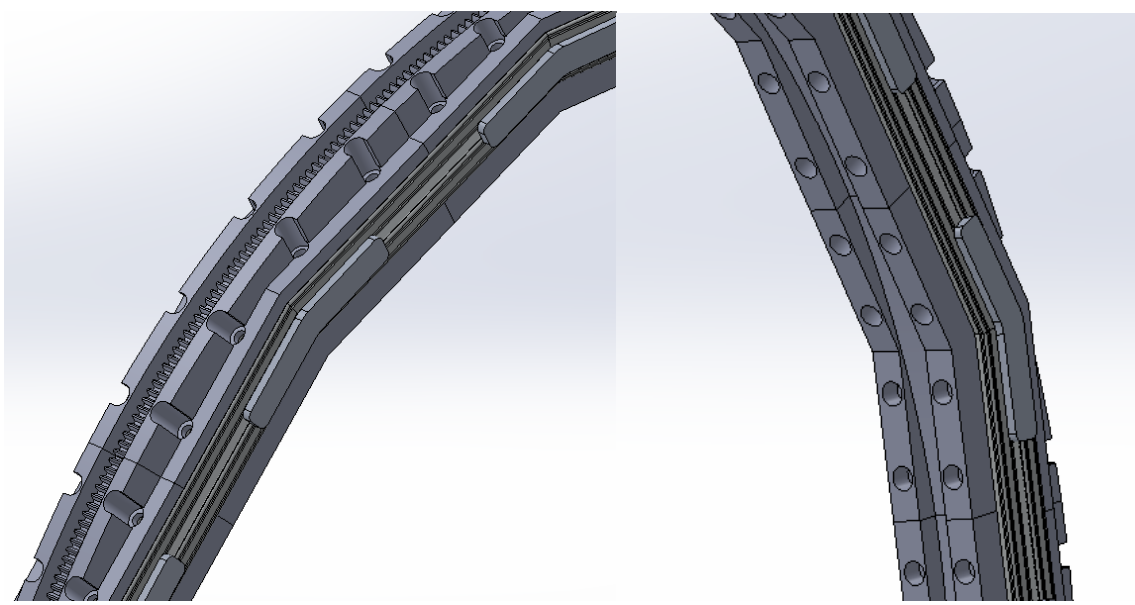

Figure 13 (Left): Close-up view of the Arch Frame with 3D-printed ring gear parts

Figure 14 (Right): Close-up view of the Arch Frame with 3D-printed bottom guide rail parts

The upper guide rail is a component integrating the ring gear track, mounted directly to the top surface of the 80/20 frame and features 15 mm lateral extrusions flanking the central gear track. These extrusions also serve as a dedicated running surface for the carriage's flange ball bearings and are designed with a 670 mm radius to ensure the light source maintains a constant 500 mm focal distance. The detailed geometry of the 3D-printed ring gear segment is illustrated from Figure 15 to 17.

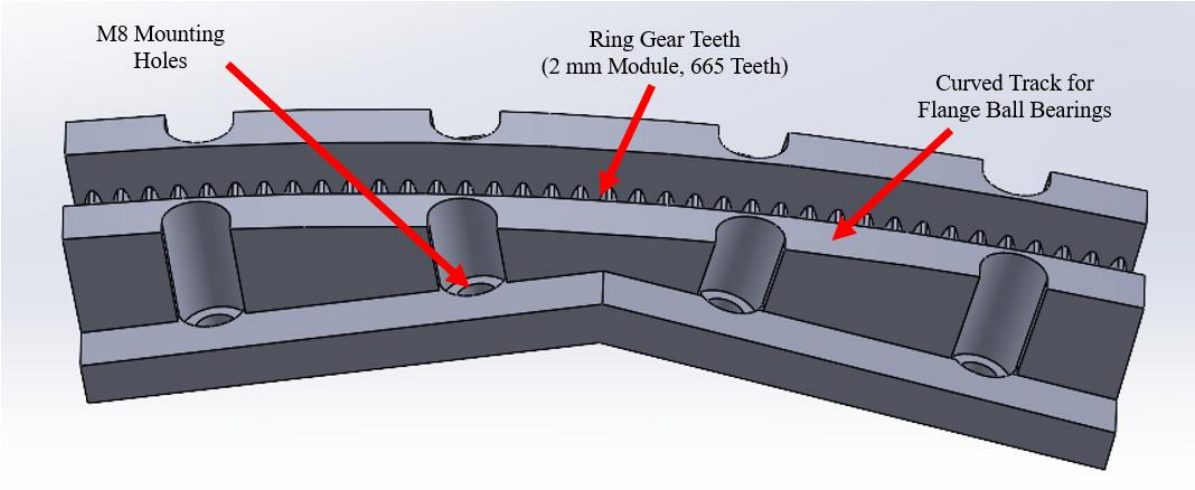

Figure 15: 3D-printed ring gear segment with M8 mounting holes

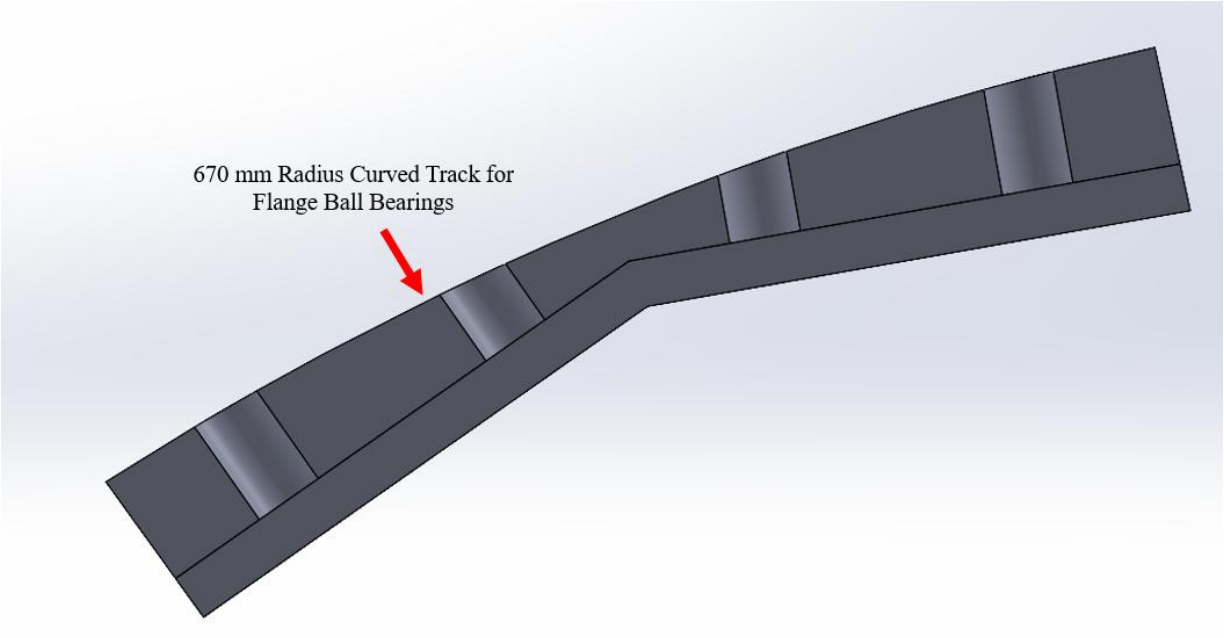

Figure 16: Right view of 3D-printed ring gear segment with Curved Track for flange ball bearings

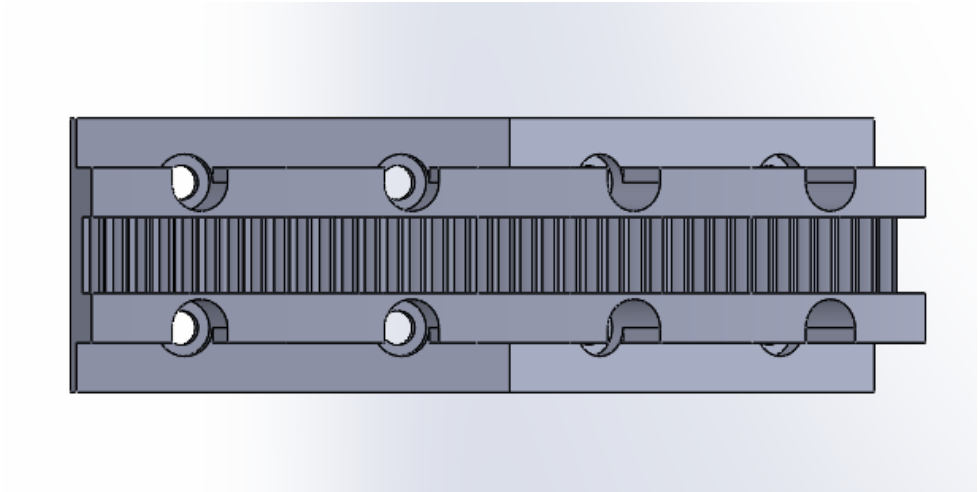

Figure 17: Top view of 3D-printed ring gear segment with ring gear teeth

Complementing this, a secondary guide rail, as seen in Figure 18 and 19 on the next page, is secured to the underside of the frame, featuring a constrained groove designed with a 588 mm radius.

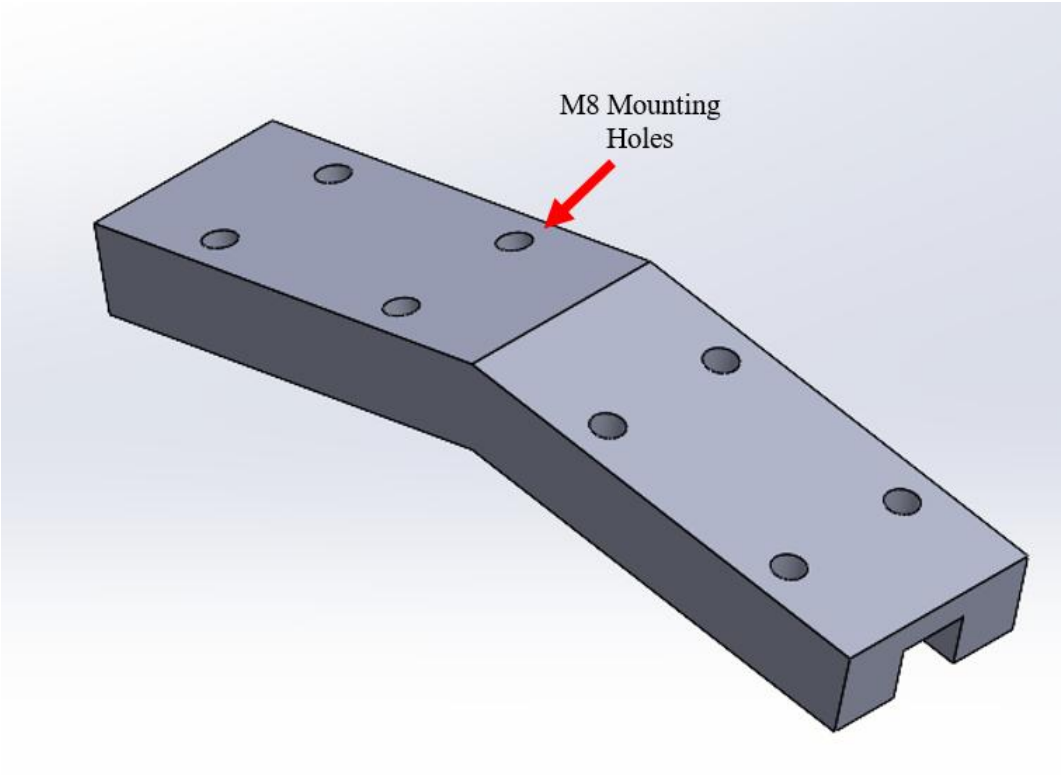

Figure 18: 3D-printed bottom guide rail segment with M8 mounting holes

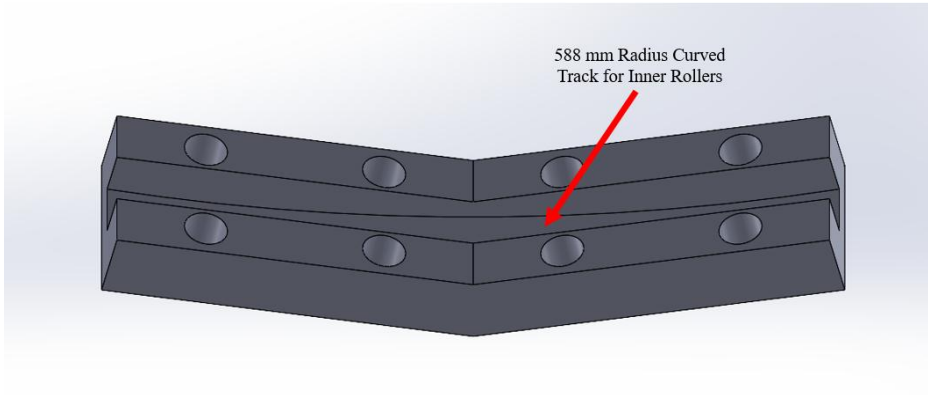

Figure 19: 3D-printed bottom guide rail segment with curved track for inner rollers

This bottom groove provides a smooth track for the carriage's two inner rollers, creating a 3-point mechanical interlock that sandwiches the aluminum frame. This dual-rail configuration exerts opposing forces, where the upper flange bearings press inward toward the focal point while the lower rollers exert an upward force against the bottom slot, to eliminate lateral wobbling and prevent vertical derailment. Consequently, this interlocking architecture ensures that the carriage follows a rigid, circular trajectory with stability throughout the entire zenith motion. The detailed view for 3-point interlock is illustrated in Figure 20 and 21.

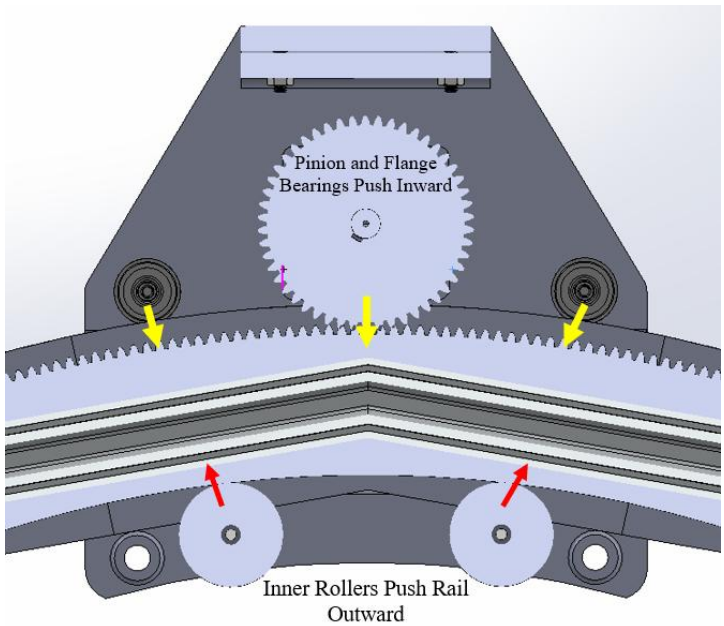

Figure 20: Detailed view of 3-point mechanical interlock engaging the ring gear and bottom groove

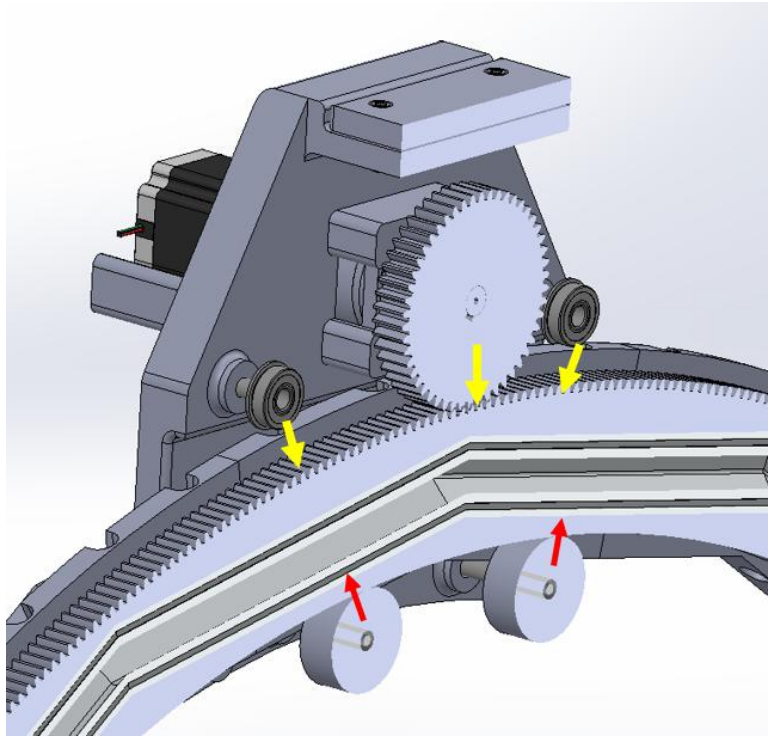

Figure 21: Detailed view of 3-point mechanical interlock engaging the ring gear and bottom groove

Gear Design

The motion transmission system uses a 2 mm module to balance robust torque transmission with fine angular resolution. While smaller modules could offer higher positioning resolution, they are significantly more sensitive to the alignment errors and fabrication variances inherent in 3D printing. The selection of a 2 mm module provides the necessary tooth thickness and shear strength to withstand constant gravitational loading from the 5.5 kg carriage assembly while maintaining a manageable pinion size.

The ring gear has 665 teeth and a pitch diameter of 1330 mm, providing the necessary gearing ratio for precise altitude tracking. To accommodate the build volume constraints of the Stratasys F370 printer, the gear is fabricated in discrete 30 cm segments. These segments are designed to preserve pitch continuity across the segment interfaces, ensuring smooth, uninterrupted motion throughout the entire zenith path. Driving the carriage is a pinion with 50 teeth and a pitch diameter of 100 mm. This tooth count represents an increase from the initial 40-tooth design ($d_{pinion} = 80$ mm) to expand the pinion's physical scale, thereby improving tooth engagement area and facilitating a more robust integration with the NEMA 23 powertrain assembly.. This pinion utilizes a standard 20° pressure angle involute profile to ensure smooth engagement with the ring gear and minimize the risk of tooth undercutting during high load operations.

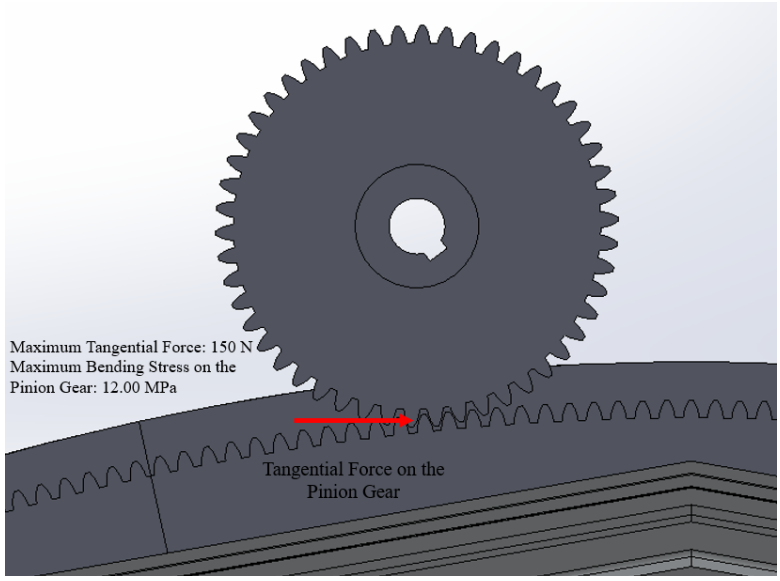

Figure 22: Close-up view of the pinion and ring gear with tangential force applied for stress validation

Carriage Chassis Design

The carriage assembly is designed as the primary structural housing for the drivetrain and optical payload, specifically designed to transport the light fixture along the discrete arch with high positioning repeatability. To optimize for the Stratasys F370 industrial printer's build volume and to enhance long-term serviceability, the chassis is bifurcated into two discrete components, as illustrated in Figure 23 and 24. The integrated carriage chassis assembly is depicted in Figure 25 on the next page.

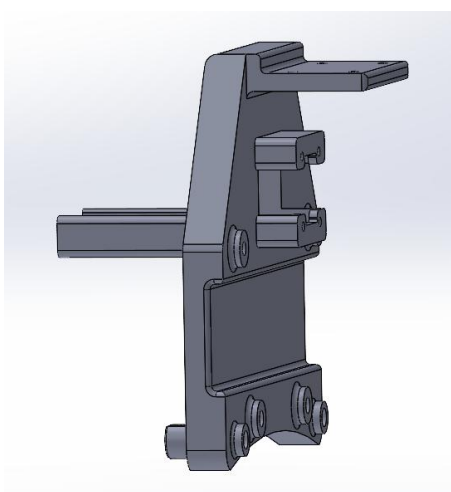

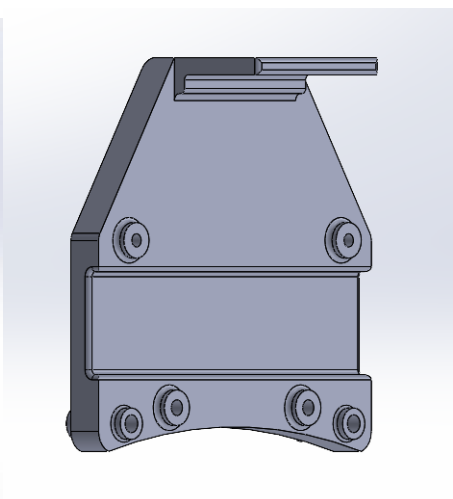

Figure 23 (Left): 3D-printed carriage chassis with powertrain housing

Figure 24 (Right): 3D-printed carriage chassis without powertrain housing

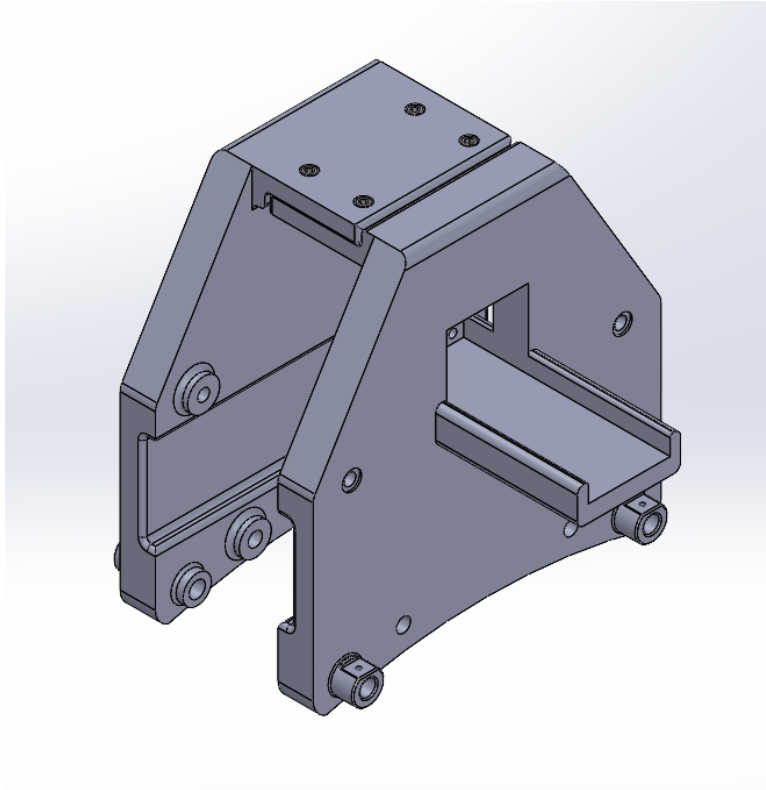

Figure 25: 3D-printed carriage chassis assembly

This modular design not only facilitates efficient initial assembly within the printer's dimensional constraints but also allows for efficient maintenance of the internal motor and gearbox without requiring a complete teardown of the carriage from the arch frame. Splitting the chassis ensured that internal drivetrain components remain accessible, which is critical for routine inspections and potential component replacements over the simulator's operational lifespan. To protect the precision gearbox and motor output shaft from structural fatigue, the chassis incorporates a load isolation mechanism using four flange ball bearings, as seen in Figure 20 and 21. These bearings function as the primary load-bearing interface, transferring the assembly's 5.5 kg total mass directly to the arch frame's lateral extrusions. By isolating the structural weight from the rotational components, the design ensures that the planetary gearbox is dedicated solely to torque transmission, effectively mitigating cantilevered loads and extending the overall life of the drivetrain. This distribution of forces ensures that the carriage follows the ring gear trajectory with minimal mechanical resistance while protecting the sensitive motion hardware from the stresses of continuous operation. The light fixture is then connected to the carriage with two D-shaped rods. The final view of the carriage system is shown in Figure 26, 27 and 28 on the following page.

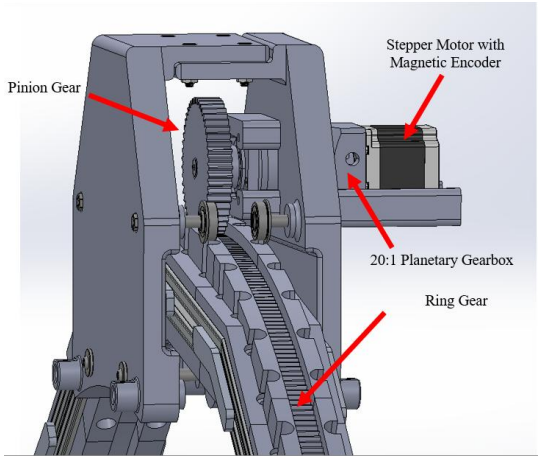

Figure 26: Carriage chassis assembly with NEMA 23 stepper motor and 20:1 planetary gearbox

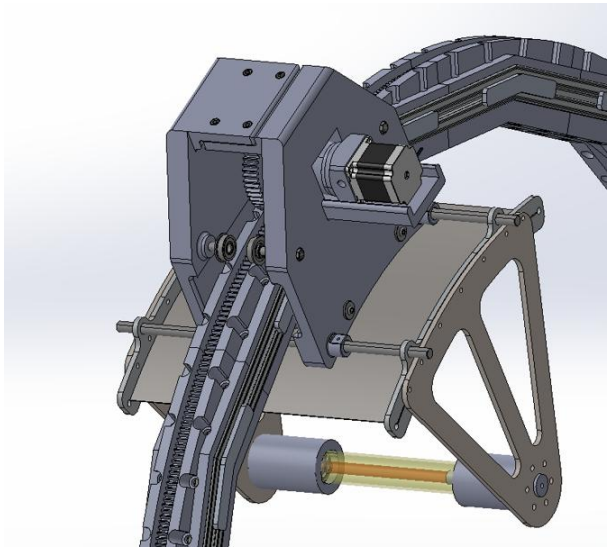

Figure 27: Detailed view of the carriage system with light fixture

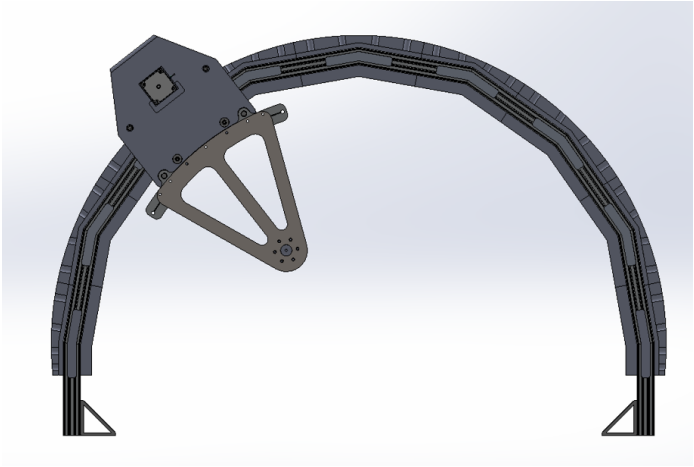

Figure 28: Front view of the carriage system with light fixture

Reflector Details

Much of our discussion centered around how to create a collimated beam from multiple light sources. Three options presented themselves: a parabolic reflector, an off-axis mirror system, and a parabolic trough. A parabolic reflector is the most common way to collimate beams from a point source, meaning a single light source rather than multiple. This means that though we could place multiple light sources into a reflector, most would not be fully collimated if they were not located at the focal point, making them redundant. Shaping a custom parabolic reflector would also be too complex for in-house manufacturing. An off-axis system would have been expensive and complex due to mirrors and components. The parabolic trough was ultimately chosen due to its ability to accommodate multiple light sources linearly at its focal point and its simplicity to manufacture with fewer parts. Despite our design changing from multiple light sources in an array toward a single 1500W bulb, this design still makes the most sense considering our light source is not approximately well as a point source.

Our polished aluminum parabolic trough is 300mm long by 300mm wide, with a 250mm focal length, with a mirror like finish and a reflectivity between 85-92% in the visible light spectrum and 90-95% in the infrared spectrum. A perfect parabolic surface was modeled in ANSYS Zemax for ray tracing analysis, which, along with heat transfer analysis in Ansys Thermal Desktop**,** allowed us to determine the optimal focal length at which the most light emitted from the bulb could be collimated while not overheating the trough or any other hardware. This further informed the design of the fixture that bends the aluminum sheet into the desired shape. The trough material properties are summarized in the following Table 9.

Table 9: Trough Material Properties

Property	**Aluminized Mylar**	**Polished Aluminum**	**Polished Steel**
Visible Reflectivity	90-95%	85-92%	55-65%
IR Reflectivity	95-98%	90-95%	70-80%
UV Reflectivity	70-85%	70-85%	<40%
Specular Quality (mirror-like)	Very High	High	Medium
Mechanical Durability	Low	Low	High

Analysis & Testing

To evaluate how well our design meets the goals set for the project, we required the thermal, optical, electrical, and mechanical analysis of key elements. We needed to know how hot both our bulb and parabolic trough would get over time to ensure safe operation. Additionally, we needed to evaluate the level of collimation of light from our array as well as its total irradiance on the target

area. Lastly, the stresses the motor carriage face while moving along the arc needed to be determined for its longevity of use.

Thermal Analysis

To determine the maximum temperature of the trough reflector, radiation and convection heat transfer analysis was conducted in Ansys Workbench. Several simplifying assumptions were made to enable an analytical formulation.

First, the light source, which consists of a tungsten filament enclosed by a glass cover operating at 1500 W, is approximated as a blackbody emitter and modeled as a cylinder with a diameter of 2 mm and a length of 63.5 mm. Knowing the volume and power, the volumetric heat generation is calculated for usage in Ansys:

$$\dot{q} = \frac{P}{V} \quad (1)$$

where $\dot{q}$ is the volumetric heat generation, P is the power, and V is the volume. This yielded a heat generation of 7.5 x 10^9 W/m^3. With this heat generation, the filament reaches a maximum temperature of 2027 °C during a one-hour long transient analysis. With a surface emissivity of 95%, the parabolic reflector reaches a maximum temperature of 59.85 °C during a one-hour long transient analysis.

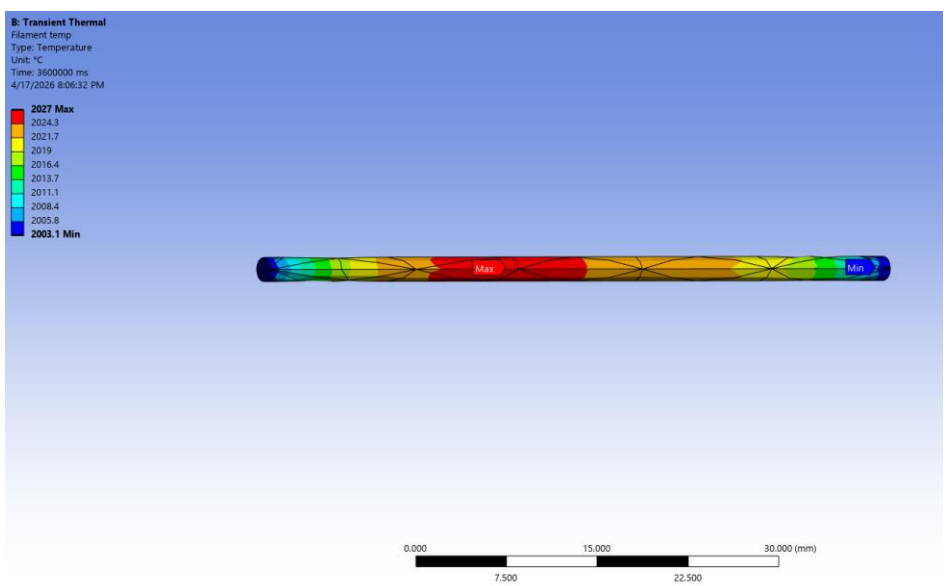

Figure 29: 1 Hour Transient Analysis on Filament

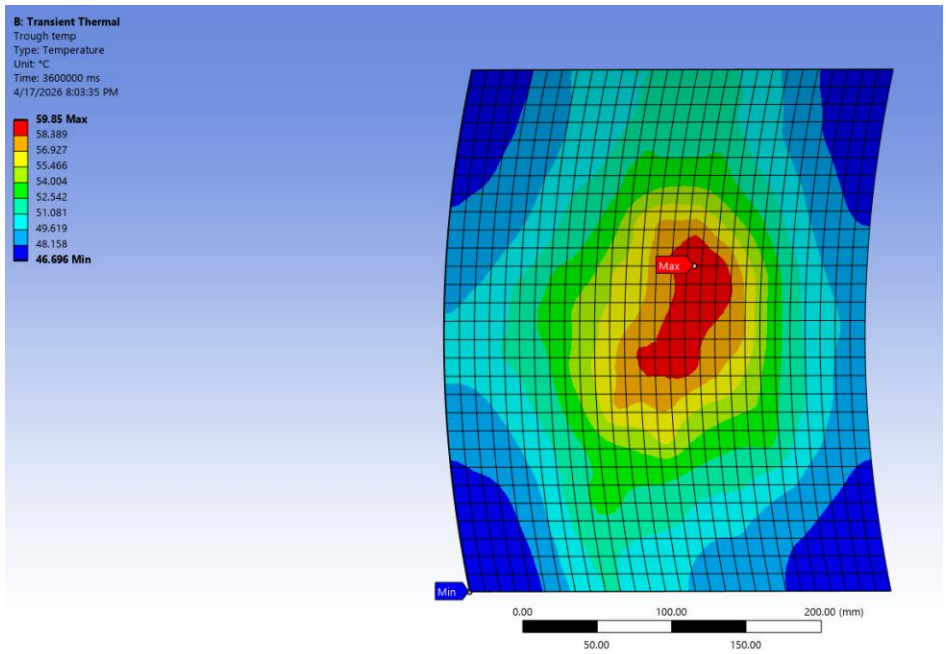

Figure 30: 1 Hour Transient Analysis on Parabolic Reflector

Optics

Several discussions and meetings have been held to discuss the mathematics and principles of optics regarding the development of a solar simulator. Professor Kowalski and Professor Charles DiMarzio have provided necessary considerations, suggestions, and brief virtual and/or in-person lectures on the topic. Among these discussions, Professor DiMarzio has suggested the use of the Zemax software for simulating optical related simulations.

The parabolic reflector has an easy equation to use to characterize the desired design for the given focal length:

$$y = \frac{x^2}{4f} \quad (2)$$

where y represents the vertical axis of the parabolic mirror, x represents the horizontal axis of the parabolic mirror, and f represents the focal length of the mirror. With the chosen focal length of 250 mm, the equation that describes the parabolic trough with the appropriate curvature is

$$y = \frac{x^2}{1000mm} \quad (3)$$

We used Equation 3 to create models of the trough in Solidworks, Zemax, and Ansys for mechanical, optical, and thermal simulation respectively.

These fundamentals allow Zemax to produce simulations of our parabolic trough and characterize its performance as depicted in Figure 30 and 31. We can insert filaments, create parabolic surfaces and compute an estimated irradiance, Figure 31, value based on our parameters achieving our

target irradiance but require further experimentation with the light configuration. Figures 32 and 33, respectively, depict the raytracing of the collimated light from our trough at isometric and perpendicular views.

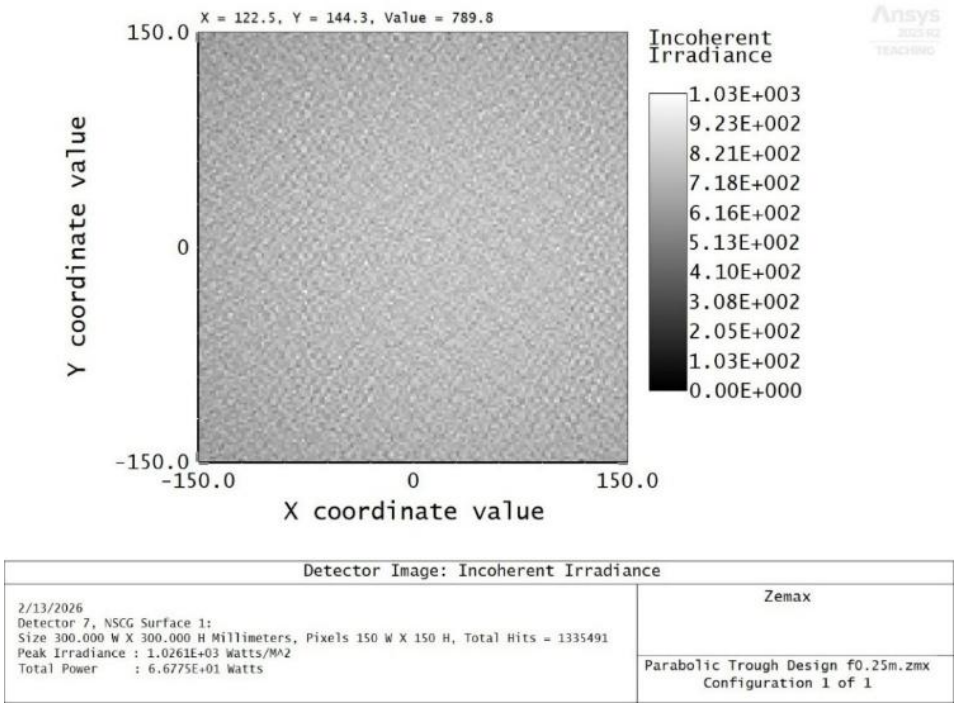

Figure 31: Simulated irradiance map of heliostat mirror

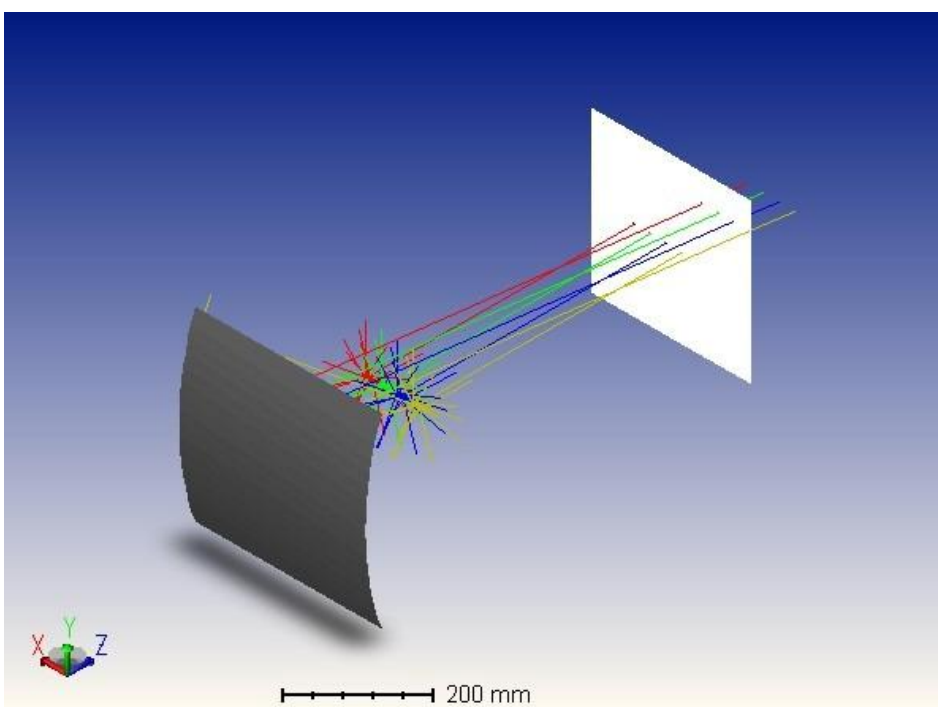

Figure 32: 3D raytracing depicting collimation of light within Zemax

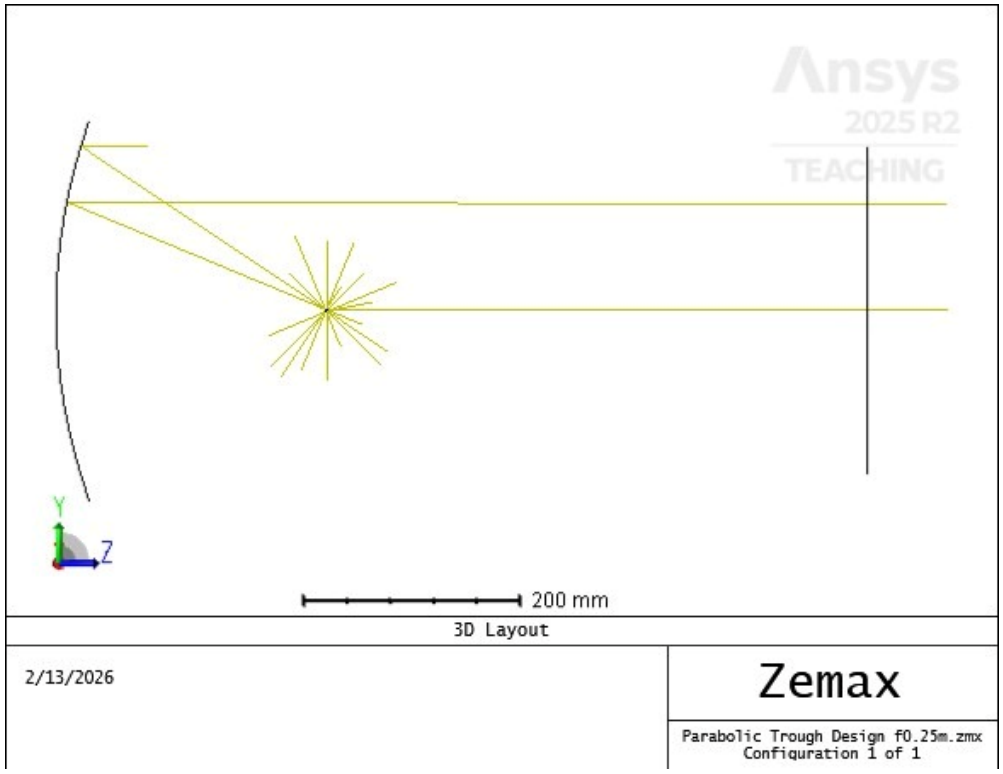

Figure 33: 2D Raytracing depicting collimation of light by parabolic trough

Bulb Wiring and Electronics

To test the configuration of the tungsten halogen bulbs, a wired connection was created between one bulb and a variac. To achieve this, the variac cable was cut, and the live wire and neutral wire were connected to two separate 16-gauge wires. These 16-gauge wires were then crimped and secured to electrical connectors which were screwed into the bulb socket. All exposed wire and metal was covered with electrical tape for safety. After connecting the variac to a power supply, it was then configured to supply varying levels of voltage to the bulb.

Gear Bending Stress Analysis

To ensure the long-term operational reliability of the zenith motion control system, structural analysis was performed on the 3D-printed drivetrain components. The primary objective was to verify that the ABS-fabricated pinion could withstand the peak tangential forces generated during a vertical lift of the 5.5 kg carriage assembly without exceeding the material's yield strength. The analysis follows the fundamental rating factors and calculation methods for involute spur gear teeth as defined by the AGMA standard [10].

The fundamental AGMA equation (4) for bending stress (σ_b) in spur gears is used to evaluate the drivetrain's integrity:

$$\sigma_b = \frac{F_t}{b \cdot m \cdot Y_J} \cdot K_a \cdot K_v \cdot K_s \cdot K_H \cdot K_B \quad (4)$$

In this analysis, F_t represents the tangential load, which was calculated as $118\ \mathrm{N}$ to account for the 5.5 kg carriage mass combined with a dynamic safety margin for initial acceleration. The geometric parameters are standardized with a module (m) of 2 mm and a face width (b) of 15 mm. The geometric factor (Y_J) is determined to be 0.42, corresponding to the 50 teeth pinion with a standard 20° pressure angle involute profile. To provide a conservative and realistic estimation, several modification factors were applied. An overload factor (K_a) was set to 1.25 to account for start-stop shocks, a dynamic factor (K_v) of 1.15 to compensate for the surface finish variances of FDM-printed parts, and a load distribution factor (K_H) of 1.10 assuming precision alignment within the carriage chassis.

The calculation yielded a maximum bending stress of 12.00 MPa at the tooth rood. This resultant stress was compared against the tensile yield stress of ABS material processed through the Stratasys F370 industrial printer, which typically ranges from 30 MPa to 48 MPa depending on the printing orientation. Using the lower bound yield strength of 30 MPa, the system achieves a calculated factor of safety (FS) of approximately 2.50.

Furthermore, while this analysis focused on the 50-tooth pinion as the primary critical failure point, the results extend to the 665-tooth ring gear. Due to the high gear ratio of 13.3:1, each individual tooth on the ring gear experiences significantly fewer loading cycles compared to the pinion teeth, effectively reducing the risk of cumulative fatigue. Additionally, under the AGMA standard, the significantly larger number of teeth on the ring gear results in a higher geometry factor (Y_J) , which inherently lowers the bending stress for the same tangential load. Consequently, the safety factor of 2.50 established for the pinion serves as a conservative lower bound for the entire transmission, ensuring that the ring gear maintains an even greater structural margin throughout the projected 10^4 operational cycles.

These results further validate the transition from a NEMA 34 direct drive system to NEMA 23 configuration, providing that the mechanical advantage provided by the 20:1 planetary gearbox significantly reduces the stress intensity on the 3D printed transmission components while mitigating risks of tooth shear or plastic deformation under worst case gravitational loading.

Torque Analysis

To verify the powertrain selection, a torque analysis was conducted for the worst-case scenario, specifically when the carriage is at the vertical position where gravitational torque (T_g) is maximized. The static gravitational torque required to hold the 3 kg carriage assembly without the powertrain at the horizon is calculated as follows:

$$T_g = m \cdot g \cdot r_p = 3\ \mathrm{kg} \cdot 9.81\ \mathrm{m/s^2} \cdot 0.05\ \mathrm{m} = 1.47\ \mathrm{N{\cdot}m} \quad (5)$$

A 5.4 kg NEMA 34 direct-drive system provides a holding torque of 4.65 N·m, while 8.4 kg assembly with NEMA 34 requires 4.12 N·m of total static torque. This yields a factor of safety (FS) of approximately 1.13. This margin was deemed insufficient to account for dynamic friction or unexpected cable tension in the system.

A 1.2 kg NEMA 23 has a 1.85 N·m motor coupled with a 1.3 kg planetary gearbox, which requires 2.7 N·m of total static torque from 5.5 kg assembly. With a 20:1 gear reduction ratio, the 2.5 kg powertrain provides a theoretical capacity of 37N·m, and the actual output capacity specified from the manufacturer is 30N·m. This establishes a FS of 11.8 against the static carriage load. This robust safety margin, combined with closed-loop feedback from the integrated magnetic encoder, further ensures uniform velocity and prevents any gravity-induced acceleration during descent, thereby validating the system's capacity to replicate precise solar trajectories.

System Software & Controls

Control System Overview

The solar simulator control system is organized as a three-tier architecture comprising a host computer running python, an 'Simulator' Arduino Mega 2560 that drives the pan and tilt axes of the beam source, and an additional 'Tower' Arduino Mega 2560 that drives the two-axis heliostat mirror. The host computer is the main point for user interaction which is where it computes the solar trajectory, orchestrates the startup sequence, and stream waypoints to the simulator Arduino over USB serial. The simulator Arduino executes real time stepper motor control for the beam source and simultaneously forwards the sun position data to the tower Arduino over a dedicated serial link. The tower Arduino independently computes the mirror bisecting angles required to redirect the beam toward a fixed target and drives its own pair of stepper motors accordingly.

This layered approach separates computationally intensive tasks from time critical tasks. The host computer operates on a millisecond scale event loop, while both arduinos execute tight microsecond scale motor control loops.

Sun Path Computation

Solar position data is generated on the host computer using the pvlib library, an open-source Python package maintained by the pvlib community for solar energy modeling that utilizes an implementation of NREL's Solar Position Algorithm (SPA). Given a simulation date, geographical coordinates (Boston, MA), and timezone (America/New York). The software computes a daylight window by evaluating solar position at one minute resolution across a full day and identifying the first and last timestamps at which elevation exceeds 0°. This yields effective sunrise and sunset times for the specified date.

The full daylight window is then reshaped into a user specified number of waypoints distributed uniformly between sunrise and sunset. At each waypoint, pvlib returns the solar azimuth and zenith angle from which elevation is derived as 90° minus zenith. The resulting trajectory is stored as an ordered list of tuples.

Time compression is achieved by mapping the full daylight window onto a user-specified playback duration. If the actual daylight period spans 8 hours and the user requests a 300 second playback, the system compresses time by a factor of approximately 96X. The interval between successive waypoints is computed as the playback duration divided by the number of waypoints, and the uses

absolute time targeting to prevent cumulative drift caused by serial communication latency and computation overhead.

Simulator Motion System

The simulator beam source is mounted on a dual axis positioning system. The pan (azimuth) axis employs a GT2 belt drive on a 4 foot (1219.2mm circumference) rail, driven through a pulley by a NEMA 23 stepper motor coupled to a 5:1 planetary gearbox. The DM542 stepper driver operates the motor ar 4 times microstepping, yielding 800 microsteps per motor revolution. The resulting pan resolution is:

$$\frac{1219.2\ mm}{32\ mm/rev} \times \frac{4000\ steps/rev}{360°} \approx 423.33\ steps/degree \quad (6)$$

The tilt (elevation) axis employs a rack and pinion mechanism with a 100 mm pitch diameter pinion, driven through a 20:1 gearbox. The arc radius from the pivot to the rack pitch line is 657.5 mm. The tilt motor is a NEMA 23 closed-loop stepper (model 23HS30-2804-ME1K) with an integrated 1000 PPR magnetic encoder, driven by a CL57T closed-loop stepper driver. The closed-loop driver reads the encoder's A and B quadrature channels at 4000 counts per revolution and continuously corrects for position error, providing immunity to lost steps caused by gravitational loading on the tilt axis. The CL57T operates the motor at 4 times microstepping, and the tilt resolution is:

$$\frac{16000\frac{steps}{rev} \times \pi \times 657.5\ mm}{\pi \times 1000\ mm \times 180°} \approx 584.4\ steps/degree \quad (7)$$

The simulator Arduino Mega runs a firmware built on the AccelStepper library, which provides non-blocking trapezoidal motion profiling for each axis independently. The main loop calls run() for both the pan and tilt stepper objects on every iteration, ensuring that step pulses are generated at the required rate without blocking on serial communication or command parsing. The firmware implements a serial command protocol at 115200 baud over USB.

Each tracking command triggers AccelStepper's moveTo() function which computes the trapezoidal velocity profile needed to reach the target position. The run() function in the main loop then steps each motor at the computed rate. Because AccelStepper handles acceleration and deceleration internally, the motor transition smoothly between successive waypoints without discrete velocity discontinuities.

Two distinct speed profiles are maintained for each axis:

Table 10: Speed Profiles across Various Testing Parameters

Parameter	**Pan (belt)**	**Tilt (rack & pinion)**
Tracking Speed	$2000\ steps/s$	$2000\ steps/s$
Tracking Acceleration	$1000\ steps/s^2$	$2000\ steps/s^2$

Slew Speed	$5000\ steps/s$	$4000\ steps/s$
Slew Acceleration	$2000\ steps/s^2$	$3000\ steps/s^2$

The tracking profile is applied during the simulation when the beam source follows the sun path. The slew profile is applied during initial positioning to the sunrise waypoint and during the return to home sequence. The handleTarget() function explicitly restores tracking speed and acceleration before issuing a moveTo() command, ensuring that parameters left over from a preceding blocking slew move do not corrupt the tracking profile.

Tower Heliostat Control

The tower heliostat mirror is positioned at the center of the simulator's 180° arc, approximately 0.5 m below the arc's midpoint. The mirror must continuously redirect the collimated beam from the moving source toward a fixed target located at coordinates x, y, and z relative to the mirror center.

The mirror orientation is computed using the vector bisector method. Given a unit vector $\hat{s}$ pointing from the mirror toward the sun (derived from the azimuth and zenith angles) and a unit vector $\hat{t}$ pointing from the mirror toward the target, the required mirror normal is proportional to their sum:

$$\hat{n} = \frac{\hat{s}+\hat{t}}{|\hat{s}+\hat{t}|} \quad (8)$$

The sun direction vector is decomposed in Cartesian coordinates as:

$$\hat{s} = (\sin\theta_z \cos\varphi\,, \sin\theta_z \sin\varphi\,, \cos\theta_z) \quad (9)$$

Where φ is the solar azimuth and θ_z is the zenith angle. The target direction is simply the normalized position vector of the target relative to the mirror. The bisector's azimuth and zenith are extracted using atan2 and converted to motor step targets.

Host Software

The python software implements a three-step interactive startup:

1. Tower homing: The user is prompted to physically reset the tower Arduino, then the host sends a 'W' command to the simulator, which forwards START to the tower. The user visually confirms homing completion via the tower's USB serial monitor and presses Enter to proceed.
2. Simulation Configuration: The user enters a simulation date and playback duration. The software computes the daylight window, generates waypoints, and displays trajectory summary.
3. Tracking: The host slews the simulator to the first waypoint using blocking moves, sends the initial position to the tower (allowing it to pre-position the mirror), and then enters the tracking loop.

All serial communication is guarded by a threading lock to prevent interleaved reads and writes between the main tracking loop and any concurrent operations. The input buffer is flushed before every command to discard stale bytes that may have accumulated during the sleep interval between waypoints.

A graceful stop mechanism is applied using a daemon thread that blocks input() when the user presses enter, a threading event is set, and the tracking loop exits cleanly at the next waypoint boundary. The system then returns both axes to the home position via blocking moves before closing the serial port.

Error Handling and Safety

The firmware features a few safety measures. The simulator firmware constrains the computed to the zenith angle to the range $0° - 90°$ before converting to step targets, preventing the beam source from attempting to move past its physical limits. Both the simulator and tower firmware computes the shortest rotational path for the azimuth moves by normalizing the angular difference to the range $\pm 180°$ preventing unnecessary full-revolution traversals. The host software applies dynamic timeouts to blocking move commands, scaled to the expected move duration plus a safety margin. This prevents indefinite hanging if a motor stalls or a serial response is lost. The DM542 and CL57T driver provides an alarm output that signal overcurrent, overvoltage, or position following errors via a blinking red LED. While the current firmware does not read this signal programmatically, visual inspection of the driver LED during operation provides immediate fault indication.

Summary and Next Steps

The indoor solar simulator is now functional in zenith motion with the bulb chassis and motor carriage assembly; however, azimuth motion is in progress. Due to issues with the Stratasys ABS 3D printer, delays were forced on the roundtable design. As of today (4/17), these remaining ABS prints are finished and assembly with the azimuth motor and belt are moving forward. After discussions with Professor Levendis, upgrades to 3D printed material and the finishing of automated motion in both azimuth and zenith directions will allow for publication of the research and design for this project.

As for next steps, a plan to make the frame mobile with wheels is at the top. This would allow for easy transportation of the design for modifications with other solar projects and to provide simple movement into storage. Also, a sturdy metal sheet machined to hold the printed ABS azimuth teeth would provide structure for the seated arch. The arch tends to sway on the 80/20 frame support without upgrading to the printed ABS material on the azimuth roundtable.

References

[1] A. A. Rizvi, S. N. Danish, A. El-Leathy, H. Al-Ansary, and D. Yang, "A review and classification of layouts and optimization techniques used in design of heliostat fields in solar central receiver systems," *Solar Energy*, vol. 218, pp. 296–311, Apr. 2021, doi: 10.1016/J.SOLENER.2021.02.011.

[2] G. Flamant, "Concentrating solar thermal energy: Fundamentals and applications," *Concentrating Solar Thermal Energy: Fundamentals and Applications*, pp. 1–333, Sep. 2022, doi: 10.1002/9781394169702;JOURNAL:JOURNAL:BOOKS;WGROUP:STRING:PUBLICATION.

[3] R. E. Sánchez-García, R. Salmón-Folgueras, O. Castilleja-Escobedo, and J. L. López-Salinas, "A novel experimental device for solar radiation simulation: Design and evaluation," *Results in Engineering*, vol. 26, Jun. 2025, doi: 10.1016/j.rineng.2025.105207.

[4] D. Laaber, "Solar Simulators," in *Encyclopedia of Sustainability Science and Technology*, R. A. Meyers, Ed., New York, NY: Springer New York, 2020, pp. 1–29. doi: 10.1007/978-1-4939-2493-6_1055-1.

[5] "Technical Note: Solar Simulator Standards – Definitions and Comparisons." Accessed: Feb. 16, 2026. [Online]. Available: https://www.newport.com/n/solar-simulator-standards-definitions-and-comparisons?srsltid=AfmBOorT1cZSR6Os5auB4FHO3eoY7-muQ6dJj1ogjFeyuZ_wQLTY4E1f

[6] R. V. Parupudi, H. Singh, and M. Kolokotroni, "Sun Simulator for Indoor Performance assessment of Solar Photovoltaic Cells," *Energy Procedia*, vol. 161, pp. 376–384, Mar. 2019, doi: 10.1016/j.egypro.2019.02.102.

[7] B. Ranilović, P. Filipović, D. Dović, and I. Horvat, "Design methodology of a low-cost solar simulator," *Sustainable Energy Technologies and Assessments*, vol. 71, p. 103974, Nov. 2024, doi: 10.1016/J.SETA.2024.103974.

[8] A. Cassod, S. Catalina, A. Herce-Duchini, C. Hughes, J. Minardi, and G. Primoff, "The Closed-loop Heliostat And Tracker (C.H.A.T.) System ," 2025.

[9] "Precision Curved Track | PRT2 Guides, Rings & Segments." Accessed: Feb. 16, 2026. [Online]. Available: https://www.hepcomotion.com/product/curved-rails-and-track-

system-components/prt2-precision-curved-guides-rings-and-segments/?more=components.

[10] R. G. Budynas and J. Keith, “Mechanical Engineering Design.”

[11] “hp-volts-fla_charts”.

[12] “McMaster-Carr.” Accessed: Feb. 16, 2026. [Online]. Available: https://www.mcmaster.com/products/stepper-motors/stepper-motors-1~~/

[13] “Using Parabolic Solar Reflectors to Light an Underground Space - YouTube.” Accessed: Feb. 16, 2026. [Online]. Available: https://www.youtube.com/watch?v=EPUxUn-_qQQ